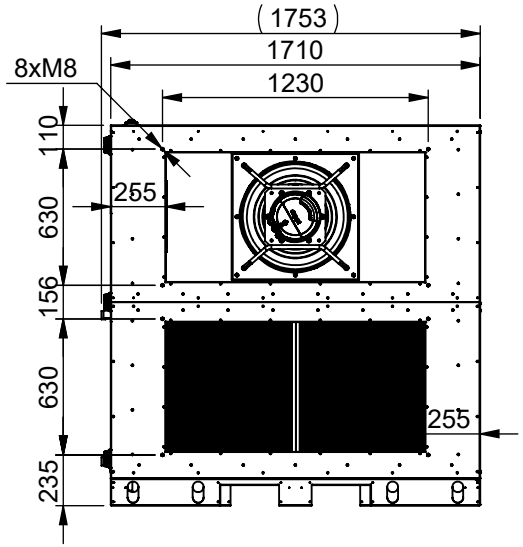

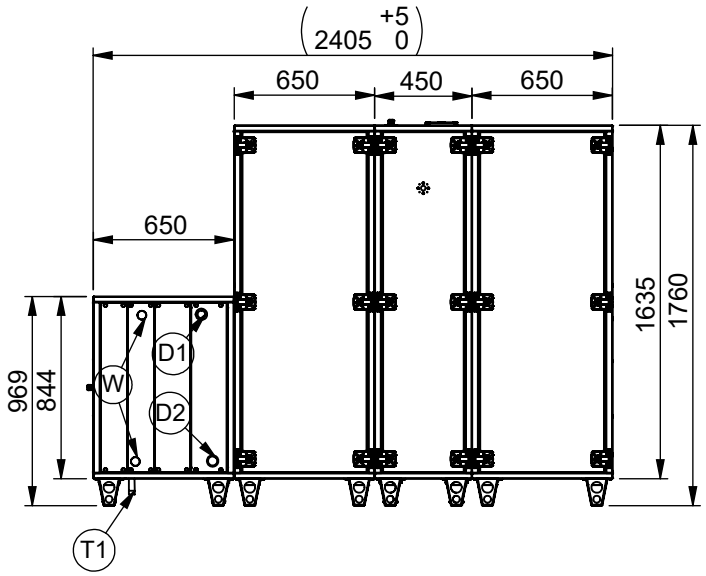

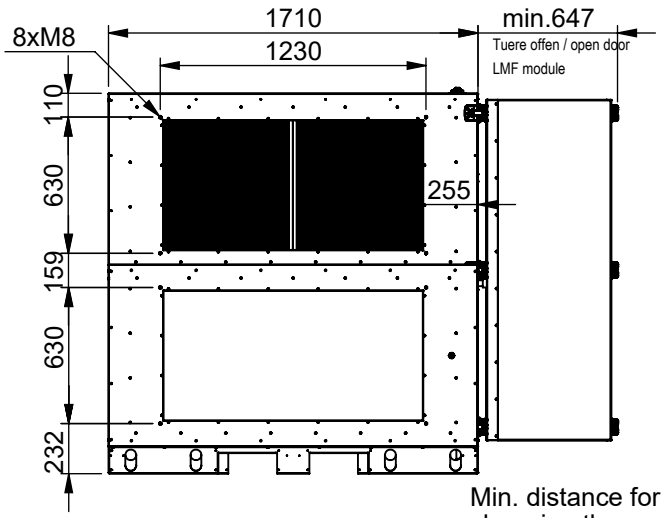

Min. distance for changing the filter 800mm !!!

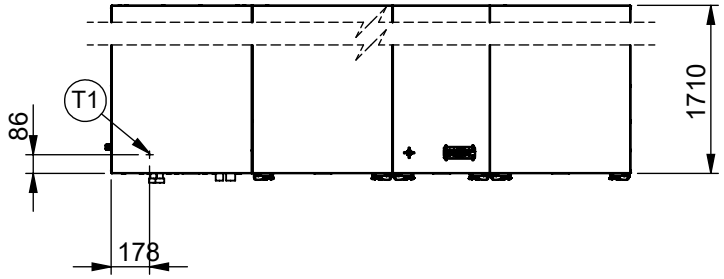

(T1) Kondensatablauf 3/4" Aussengewinde / Drain 3/4" male tread

(W) Anschluss 1" Aussengewinde / Connection 1" male tread

(D1) Kältemitteleinlass ∅35 / Refrigerant Inlet ∅35

(D2) Kältemittelauslass ∅42 / Refrigerant Outlet ∅42

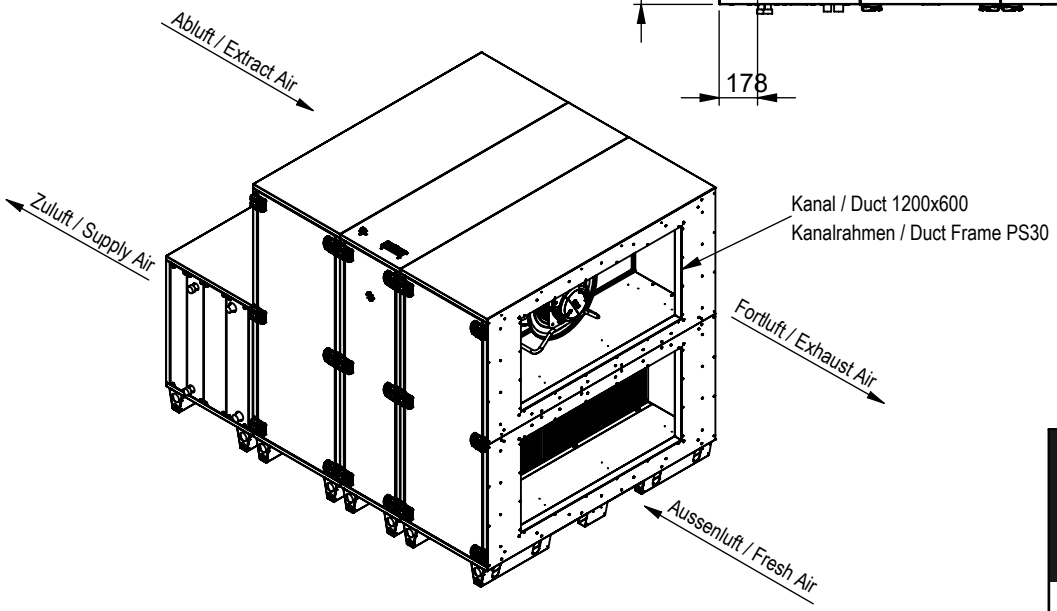

ruck

ruck Ventilatoren
Max-Planck-Str. 5
D-97944 Boxberg

1:35 A4 mm

Protection Mark according to ISO16016

General tolerances DIN ISO 2768-c

Created	l.benk	14.10.2025
Drawn	l.benk	14.10.2025
Released		
Disabled		

ROTOK10000HWDJLT

177337 00