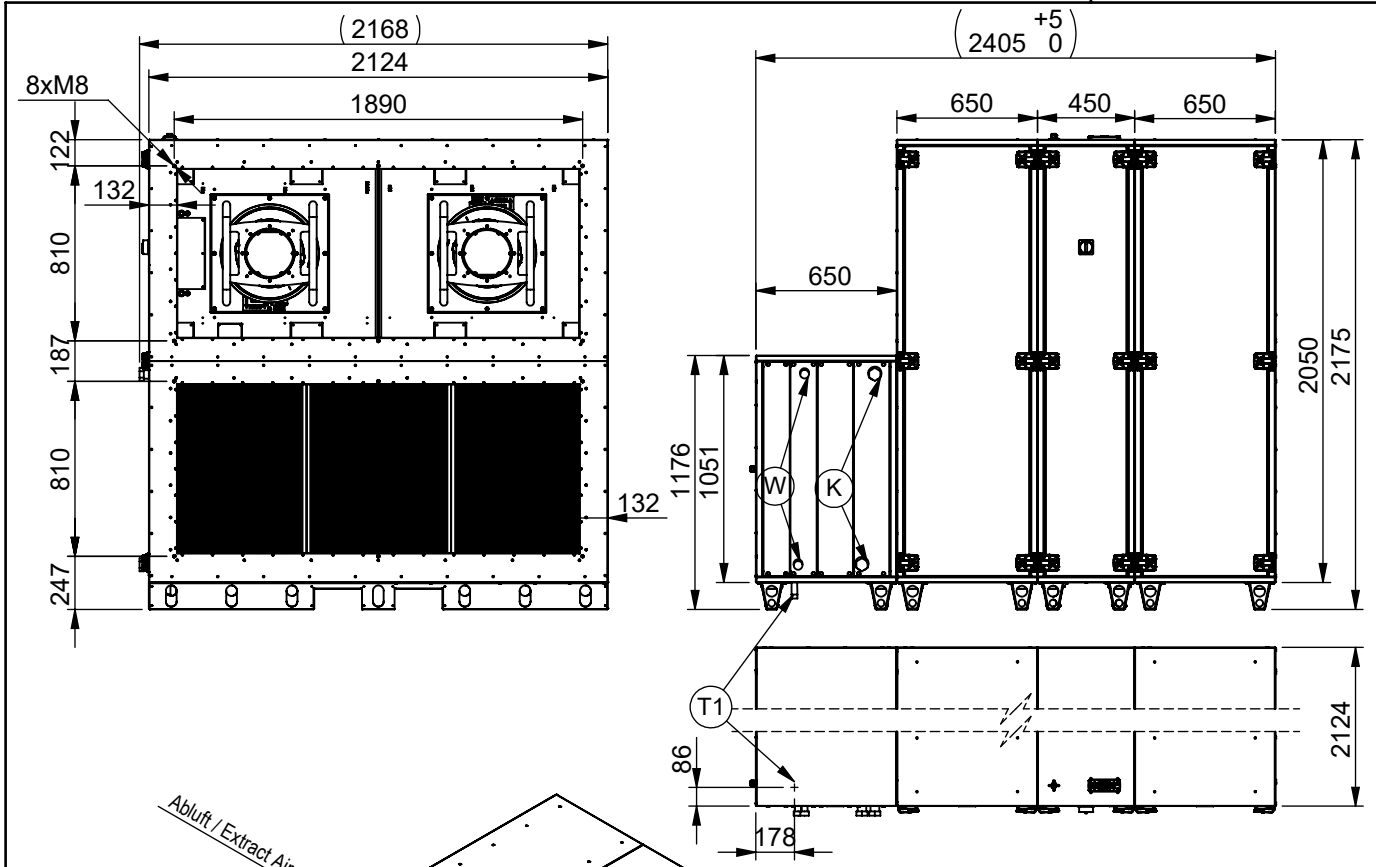

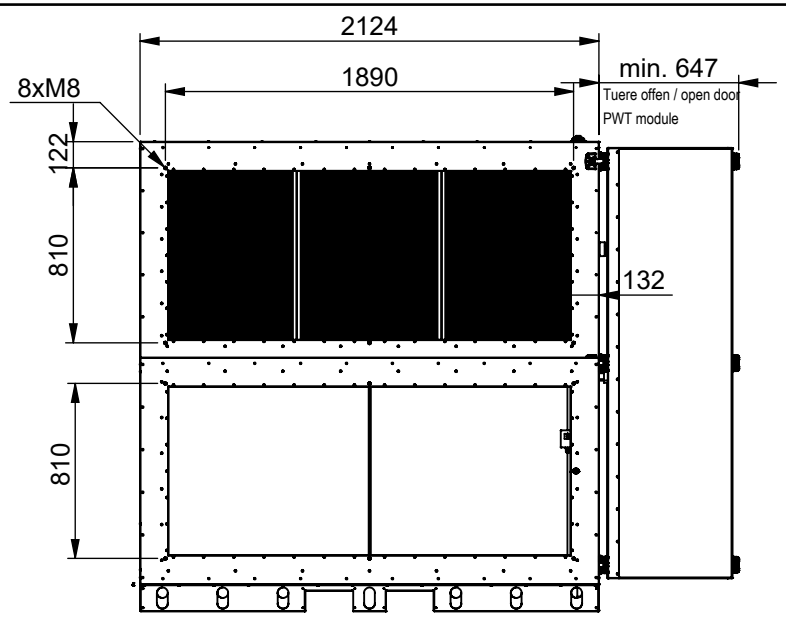

Min. distance for changing the filter 680mm !!!

T1 Kondensatablauf 3/4" Aussengewinde / Drain 3/4" male tread

W Anschluss 1" Aussengewinde / Connection 1" male tread

K Anschluss 1"-1/4 Aussengewinde / Connection 1"-1/4 male tread

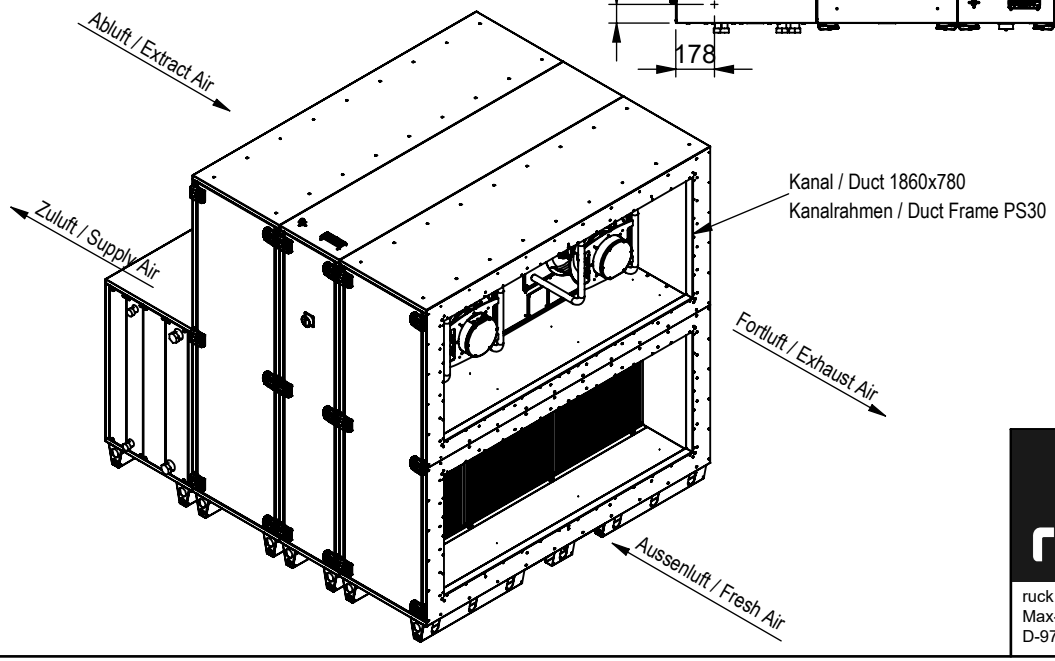

ruck

ruck Ventilatoren
Max-Planck-Str. 5
D-97944 Boxberg

1:35 A4 mm

Protection Mark according to ISO16016

General tolerances DIN ISO 2768-c

Created	I.benk	08.10.2025
Drawn	I.benk	08.10.2025
Released	I.benk	09.12.2025
Disabled		

ROTOK16000HWKJLT01

177274 00