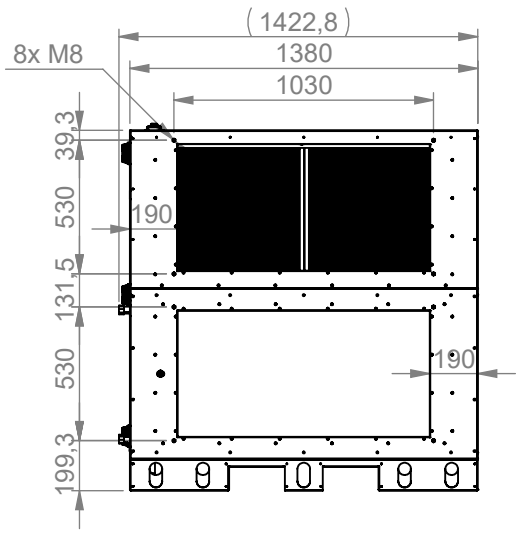

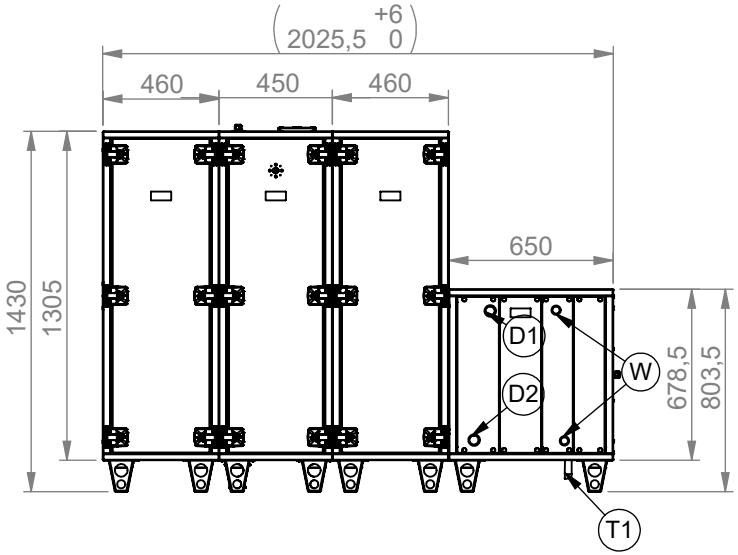

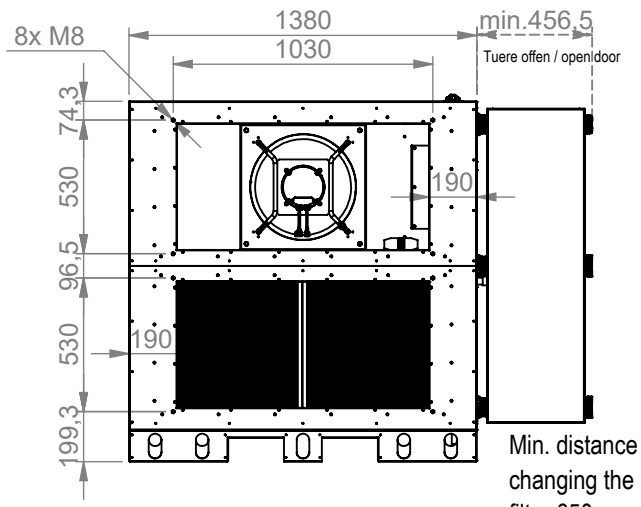

Min. distance for changing the filter 650 mm !!!

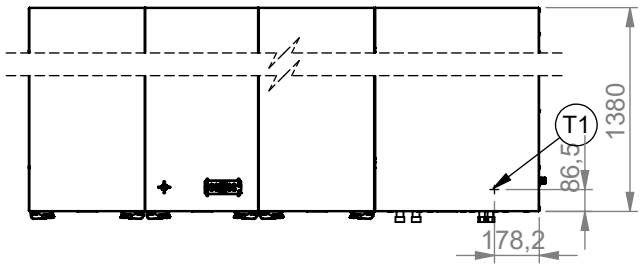

T1 Kondensatablauf 3/4" Aussengewinde / Drain 3/4" male tread

W Anschluss 3/4" Aussengewinde / Connection 3/4" male tread

D1 Kältemitteleinlass ∅28 / Refrigerant Inlet ∅28

D2 Kältemitteleinlass ∅35 / Refrigerant Outlet ∅35

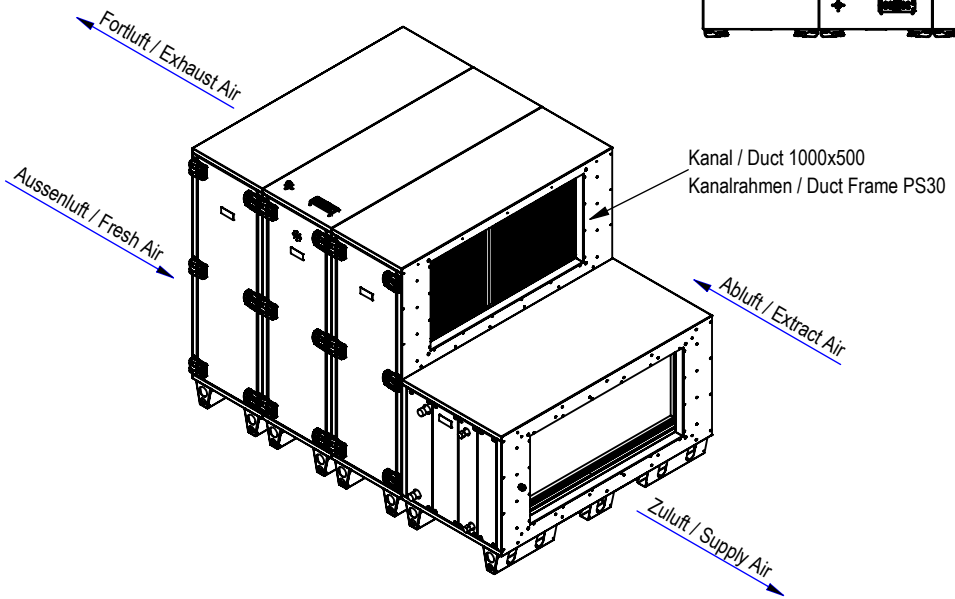

ruck

ruck Ventilatoren
Max-Planck-Str. 5
D-97944 Boxberg

1:30 A4 mm

Protection Mark according to ISO16016

General tolerances DIN ISO 2768-c

Created	l.benk	22.06.2023
Drawn	l.benk	22.06.2023
Released	a.ganea	11.03.2025
Disabled		

ROTOK5000HWDJRT

168204 00